11 x 13 FT

JFG015

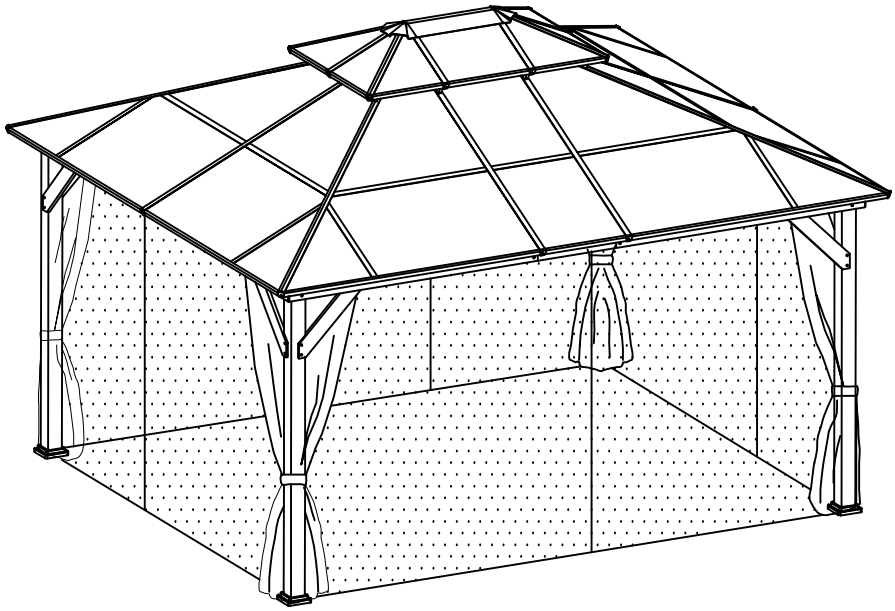



At least need 4 people work together

REQUIRED TOOLS



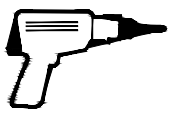

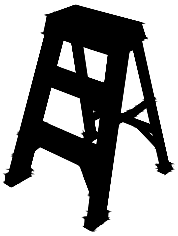

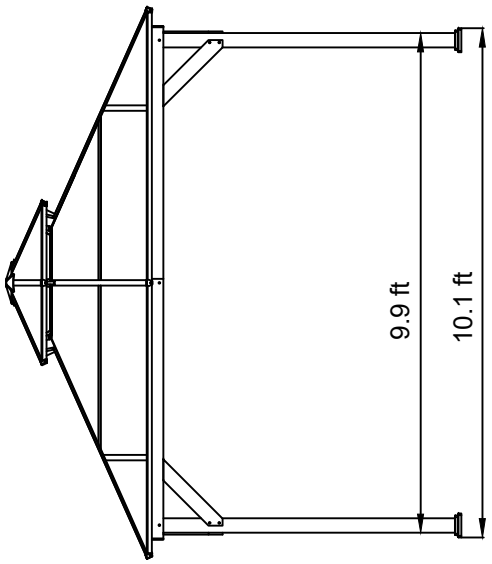
9.9 ft
10.1 ft

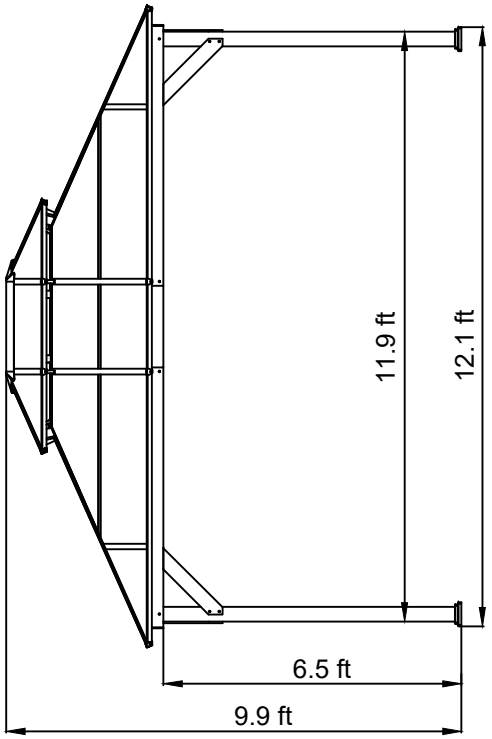
11.9 ft
12.1 ft
6.5 ft
9.9 ft

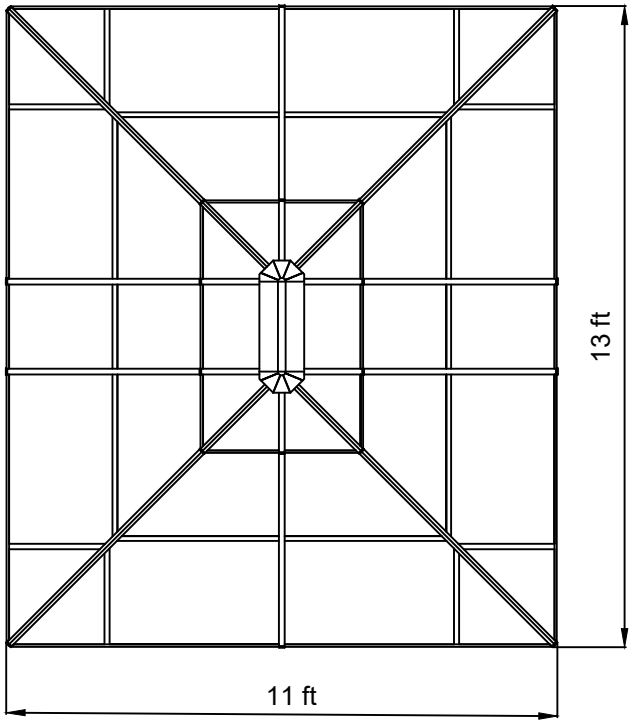
13 ft
11 ft

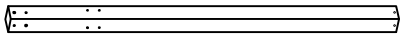

100 4x

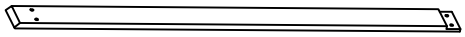

111 6x

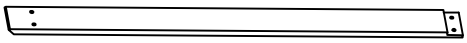

112 2x

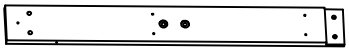

103 4x

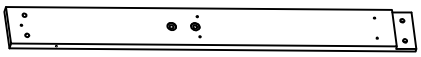

108 4x

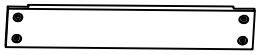

109 2x

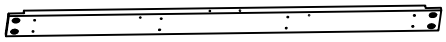

113 2x

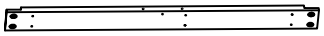

114 2x

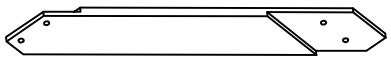

10 4x



11 4x



A 4x 23-B001



B2 4x 23-B045



C2 6x 23-B046

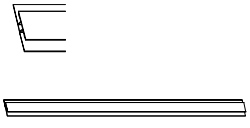

D5 2x 23-B022

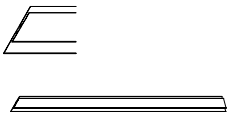

D10 4x 23-B047

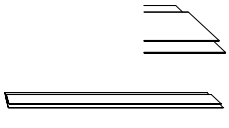

D11 4x 23-B048



D3 4x 23-B007

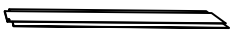

D4 4x 23-B008



E9 2x 23-B023



E16 4x 23-B049



E17 4x 23-B050



E18 2x 23-B051



E19 2x 23-B052



E20 2x 23-B053

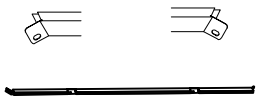

E21 2x 23-B054

G5 4x 23-B055

G6 4x 23-B056



H8 2x 23-B057



H9 2x 23-B058

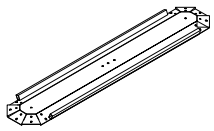

L3 1x

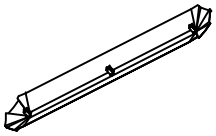

M3 1x



J 4x



K 6x



N 12x



N1 12x

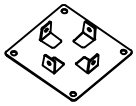

P 4x



P1 4x

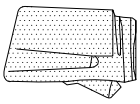

X3 4x

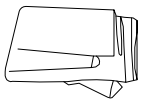

Y3 4x



R 88x

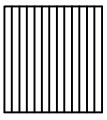

S7 4x

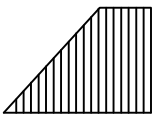

S16 4x

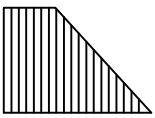

S17 4x

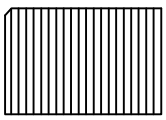

S14 4x

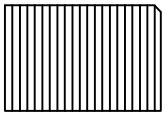

S15 4x

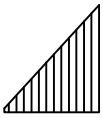

S12 4x

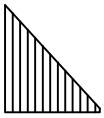

S13 4x



T6 2x

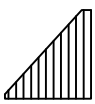

T7 4x

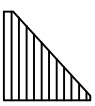

T8 4x

4

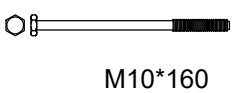

M10*160

AA 8x



M6

BB 16x

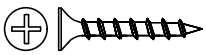

M5*40

CC 68x



M6

DD 16x

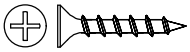

M5*30

EE 54x



M8*35

HH 16x

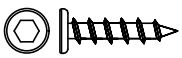

M8*35

II 16x



M8*25

KK 28x



M10

LL 8x



M8

MM 16x



M10

NN 24x

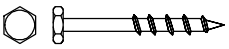

M10*80

OO 8x



M6x15

QQ 58x



M5x15

SS 12x



M6x35

TT 8x



ZZ 2x

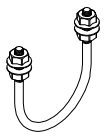

VV 1x



M6x10

XX 8x



PP 8x

M3 Drill

RR 2x



M6

Z1 2x



M10

Z4 2x

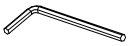

M8

Z2 2x

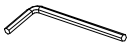

M6

Z5 2x

5

Box A	
Part #	Qty
100	4
10	4
11	4

Box B	
Part #	Qty
111	6
112	2
103	4
108	4
109	2
113	2
114	2

Box C	
Part #	Qty
A	4
E9	2
E16	4
E17	4
E18	2
E19	2
E20	2
E21	2
G5	4
G6	4
X3	4
Y3	4

Box D	
Part #	Qty
B2	4
C2	6
D5	2
D10	4
D11	4
D3	4
D4	4
H8	2
H9	2

L3	1
M3	1
J	4
K	6
N	12
N1	12
P	4
P1	4
R	88
Screw Bag:AA ...Z5	2

Box E	
Part #	Qty
S7	4
S16	4
S17	4
S14	4
S15	4
S12	4
S13	4
T6	2
T7	4
T8	4



100 4x

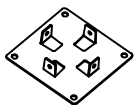

P 4x



P1 4x

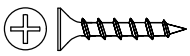

M5*30

EE 16x

7

<1>

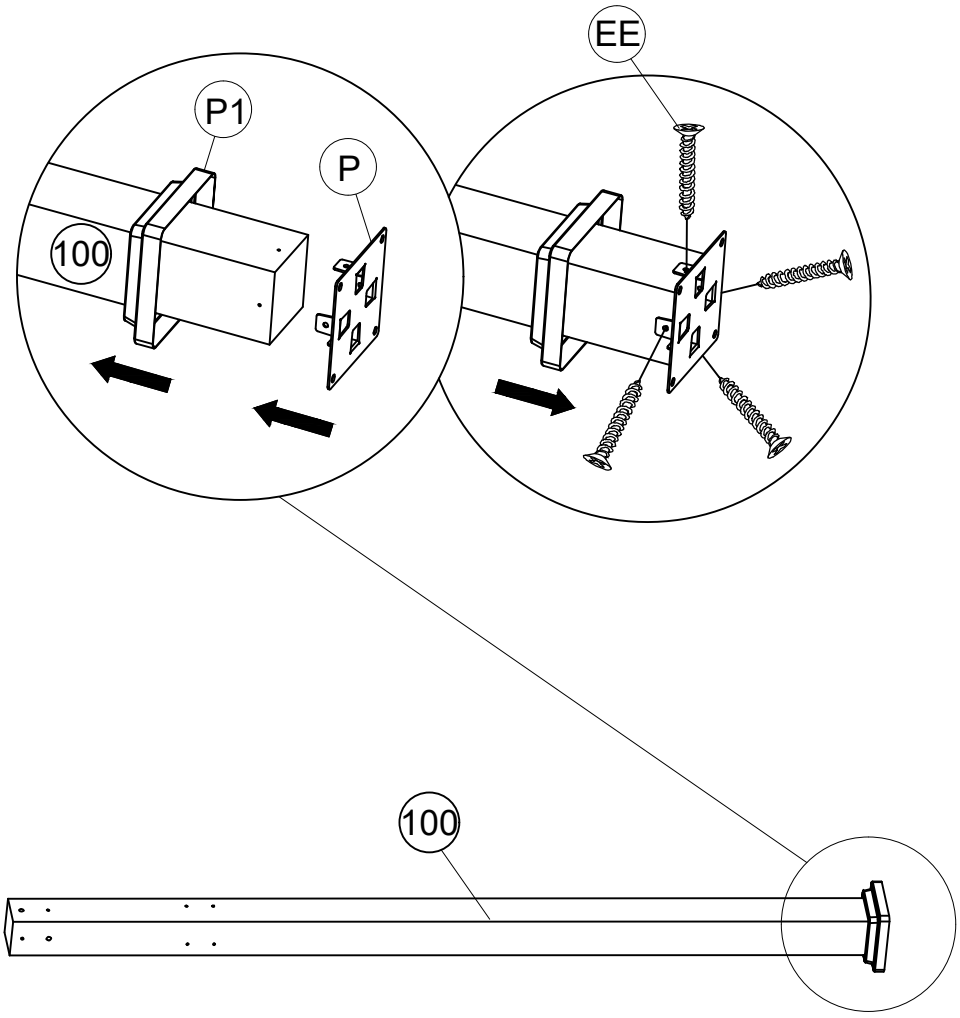

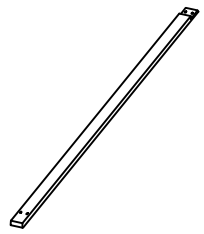

111 2x

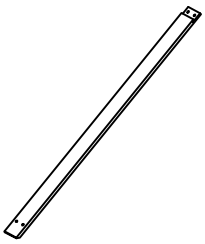

112 2x

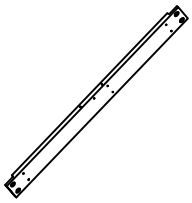

114 2x

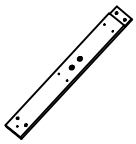

103 4x



M8*25

KK 12x

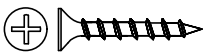

M5*40

CC 32x

8

<2>

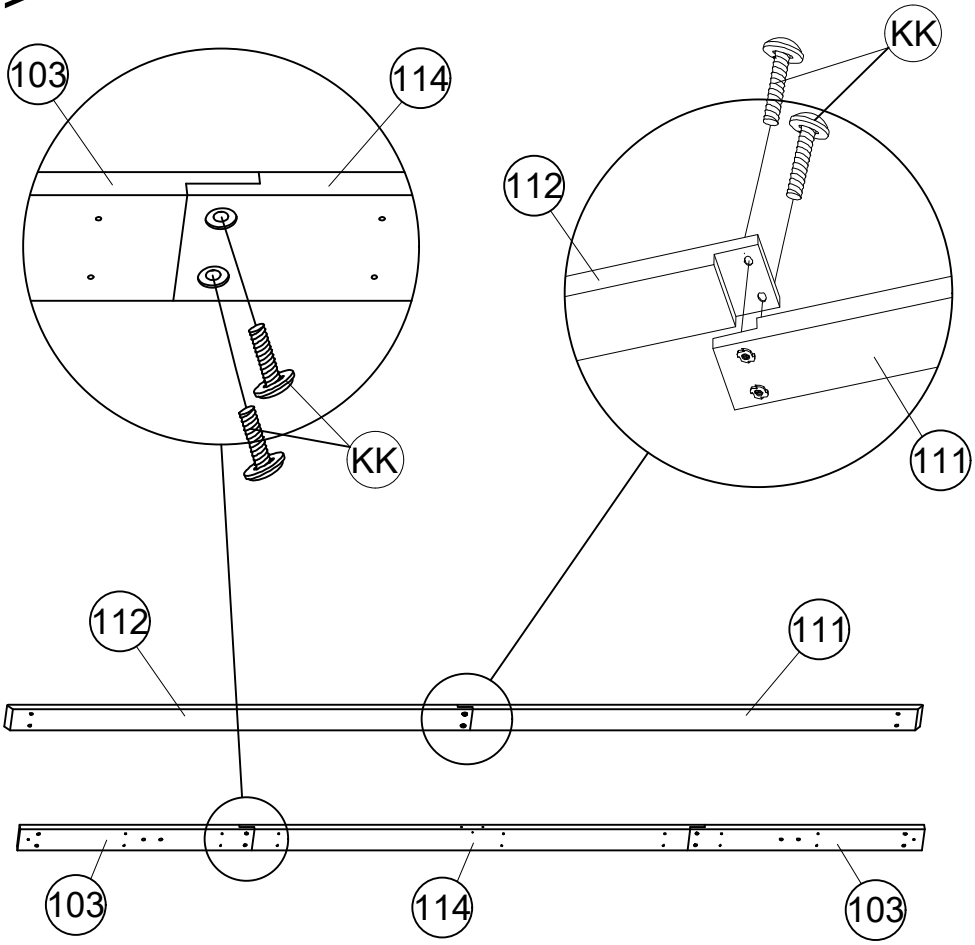

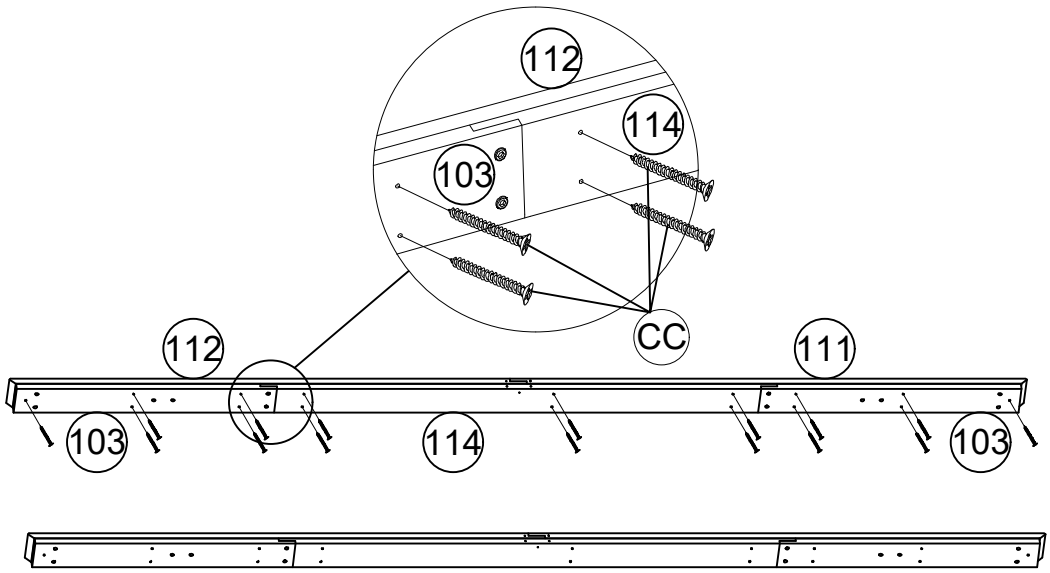

Connect the outer beams (112,111) and inner beams (103,114) separately with screw KK, and then combine the outer beams and inner beams together with self-tapping screw CC.

Attention:

Pay attention to the side of Beam (112) and Beam (111) when join them with Beam (114) and Beam (103) .

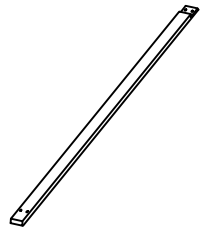

111 4x



109 2x

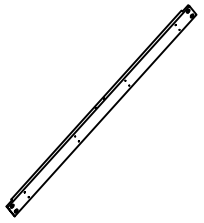

113 2x

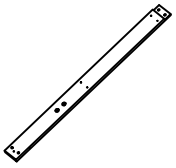

108 4x



M8*25

KK 16x

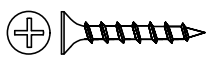

M5*40

CC 36x

9

<3>

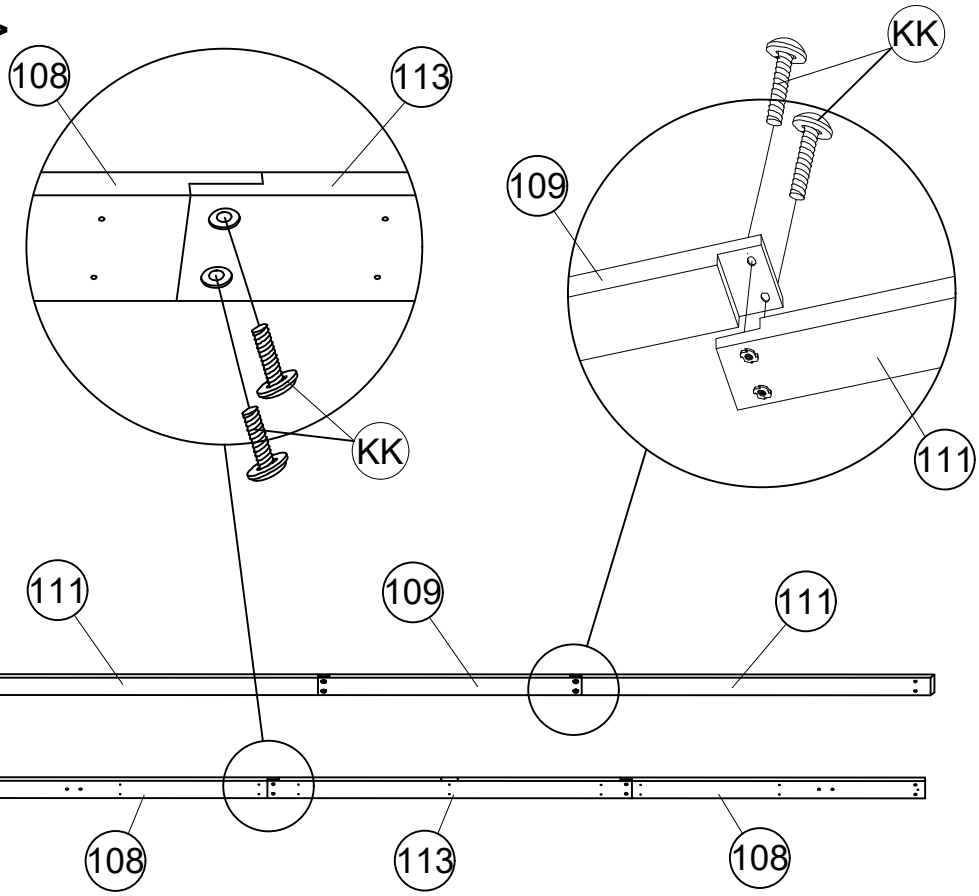

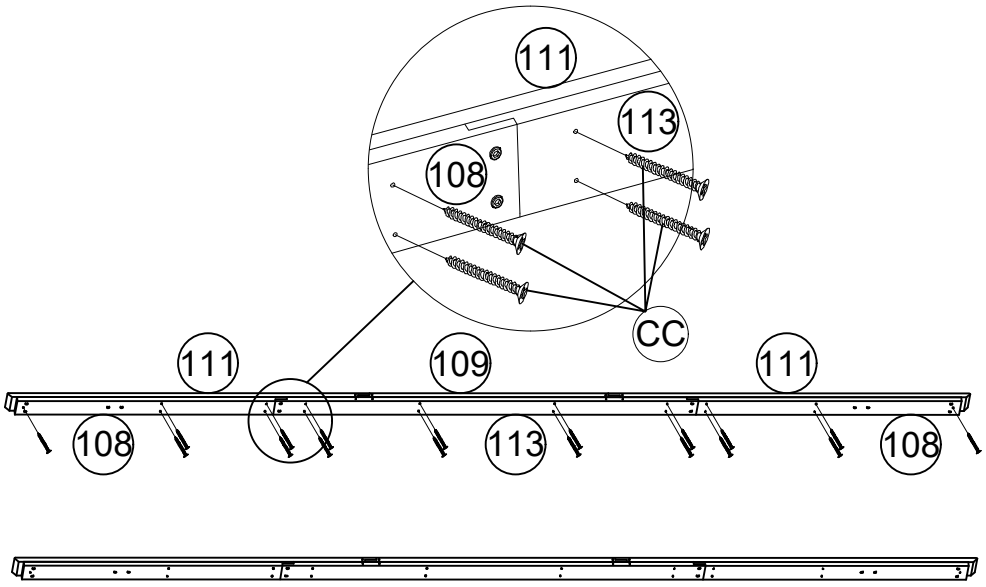

Connect the outer beams (111,109) and inner beams (108,113) separately with screw KK, and then combine the outer beams and inner beams together with self-tapping screw CC.

Attention:

Pay attention to the side of Beam (111) and Beam (109) when join them with Beam (113) and Beam (108) .

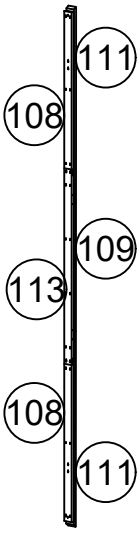

2x

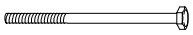

M10*165

AA 4x

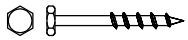

M10*80

OO 4x



M10

NN 12x



M10

LL 4x

<4>

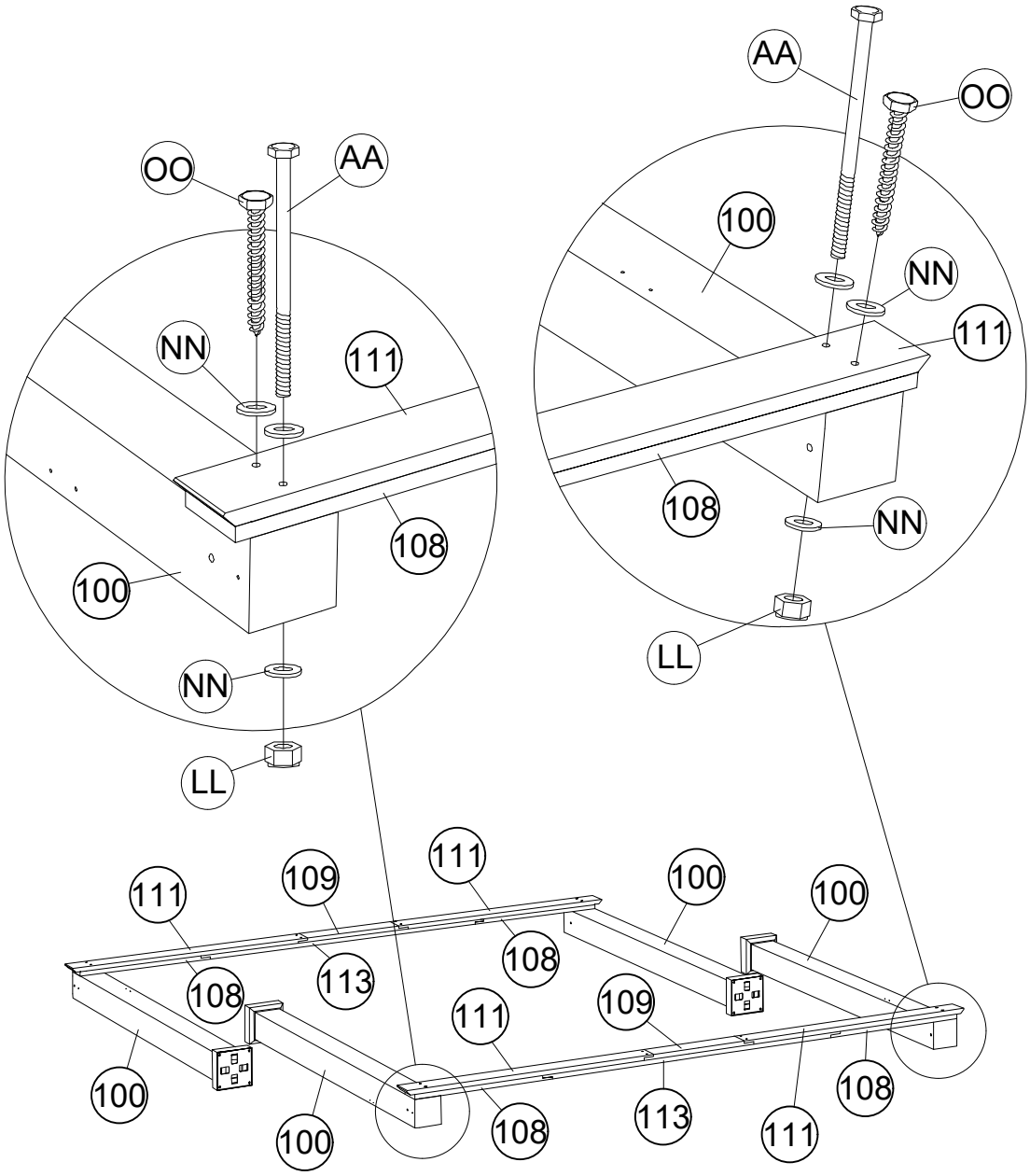

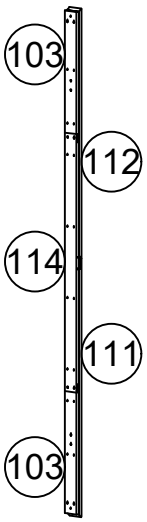

2x

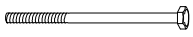

M10*165

AA 4x

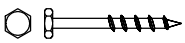

M10*80

OO 4x



M10

NN 12x



M10

LL 4x

11

<5>

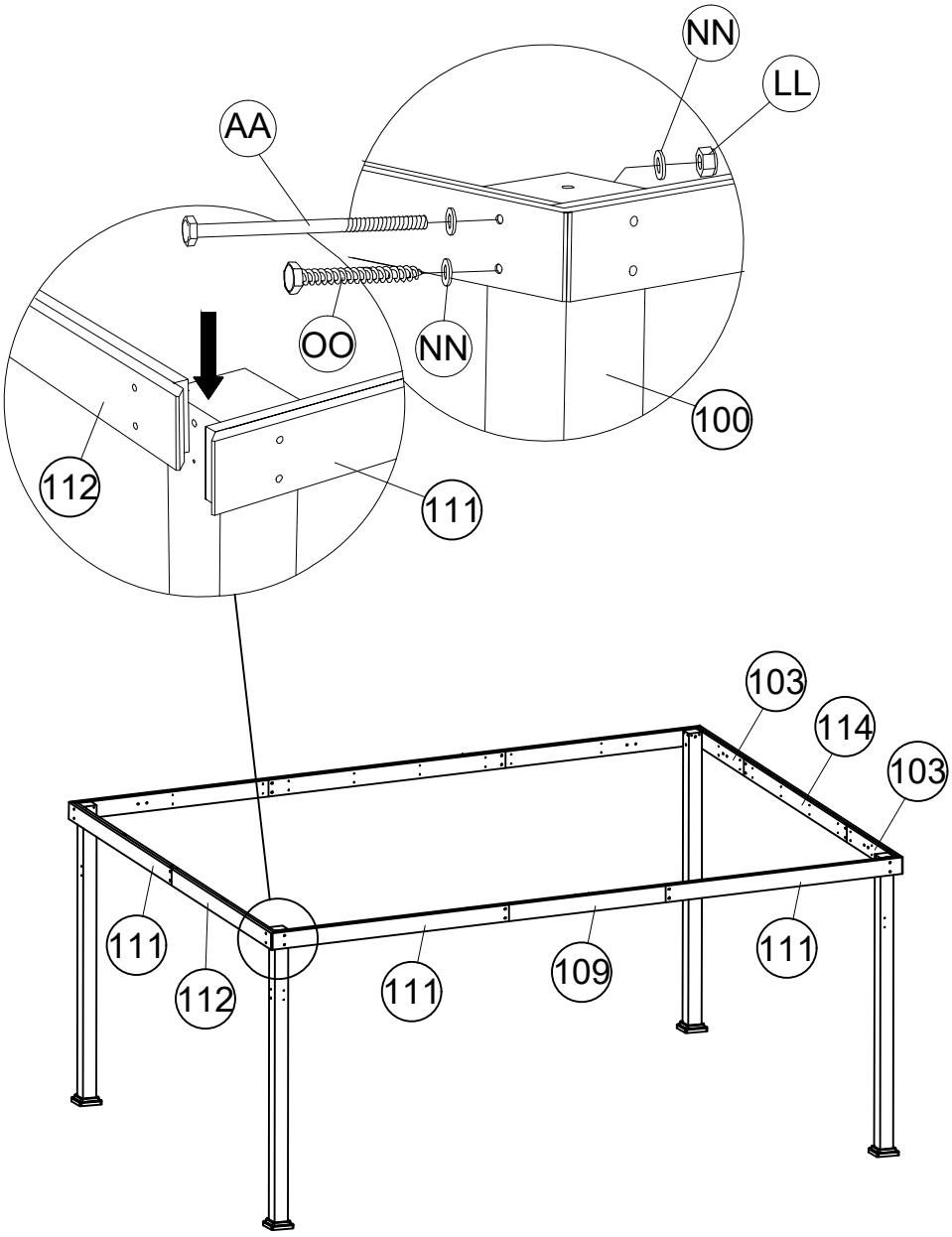

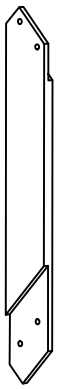

10 4x

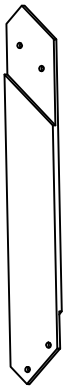

11 4x



M8*35

HH 16x

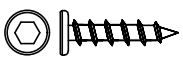

M8*35

II 16x



M8

MM 16x

<6>

I d1=d2

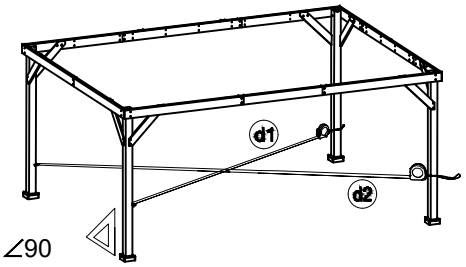

Rt∠90

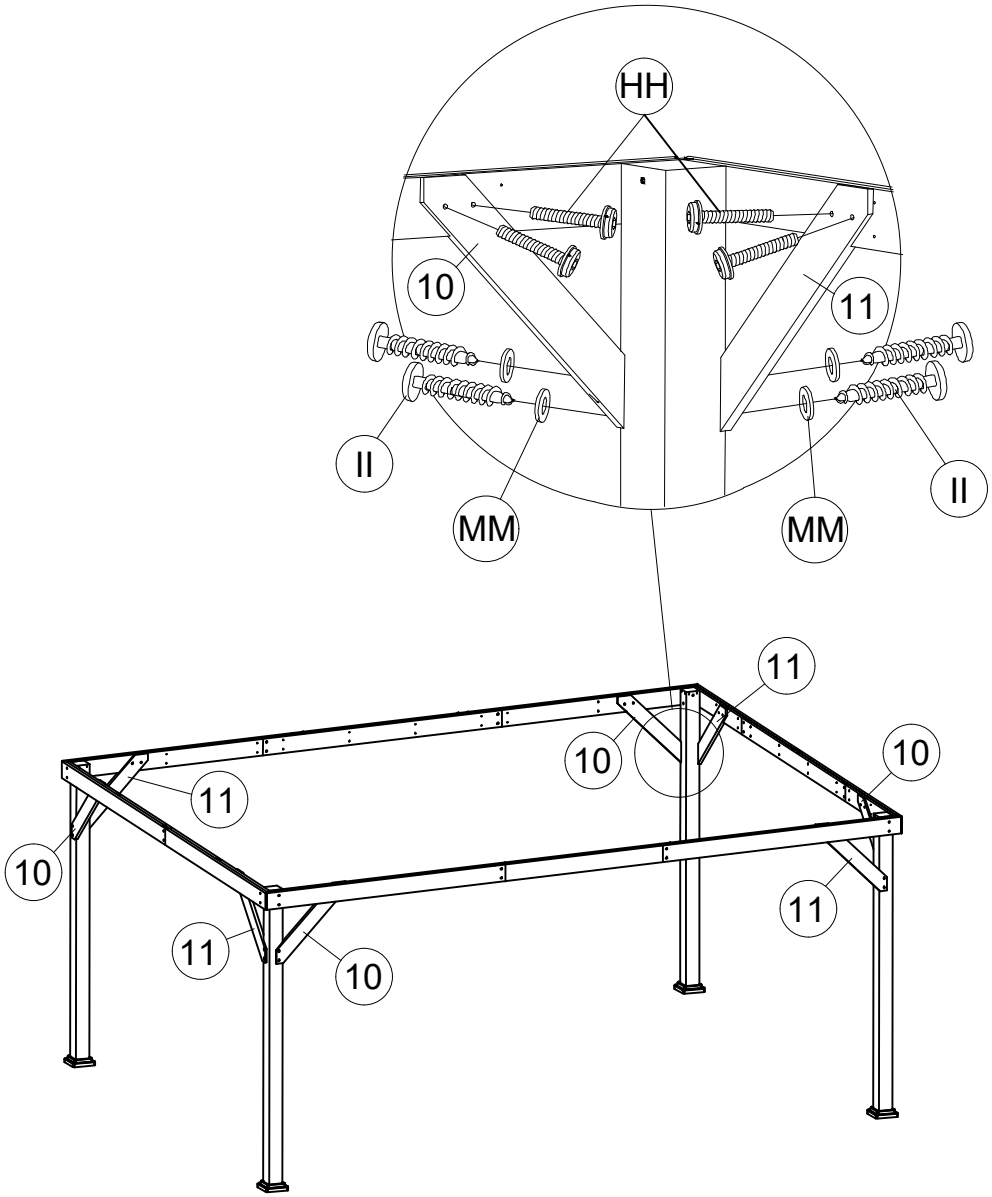



J 4x

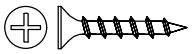

M5*30

EE 16x

<7>

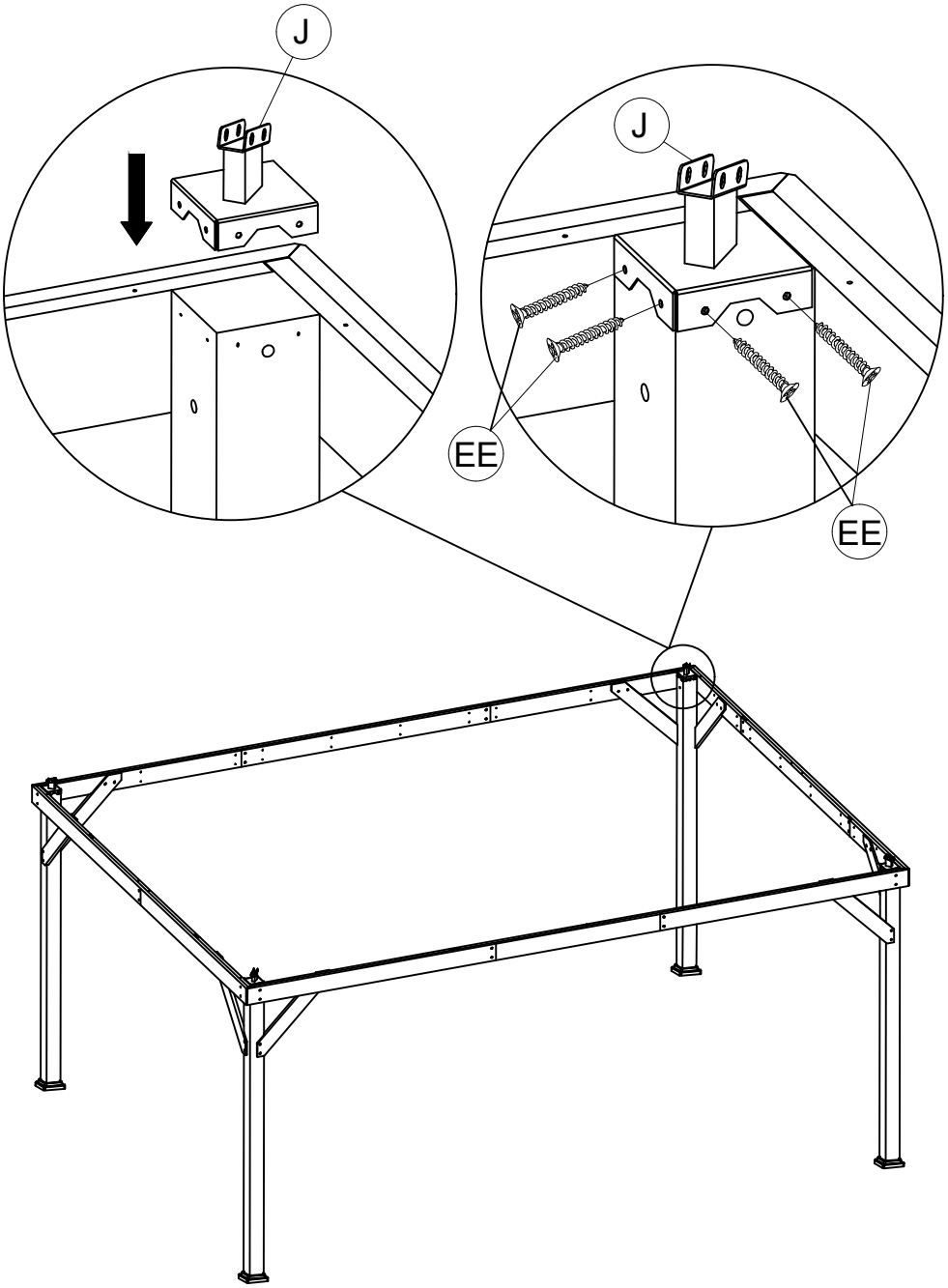

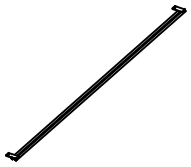

G5 4x



G6 4x

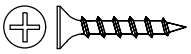

M5*30

EE 16x

<8>

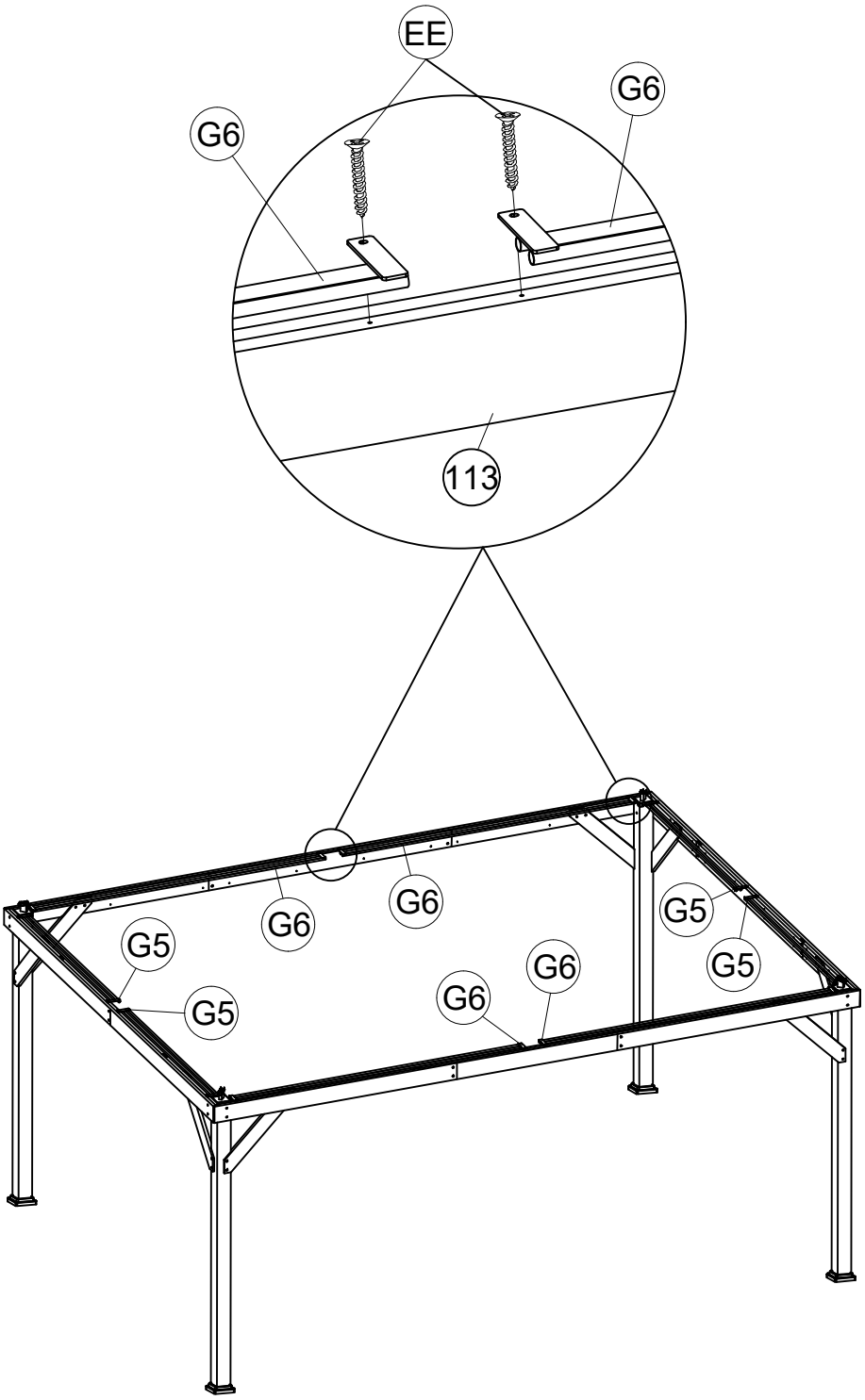

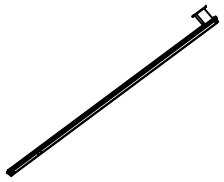

A 4x



B2 4x

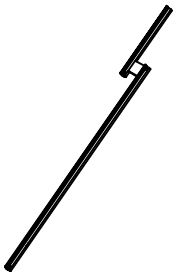

C2 6x



K 6x



M6x15

QQ 8x



M5x15

SS 12x

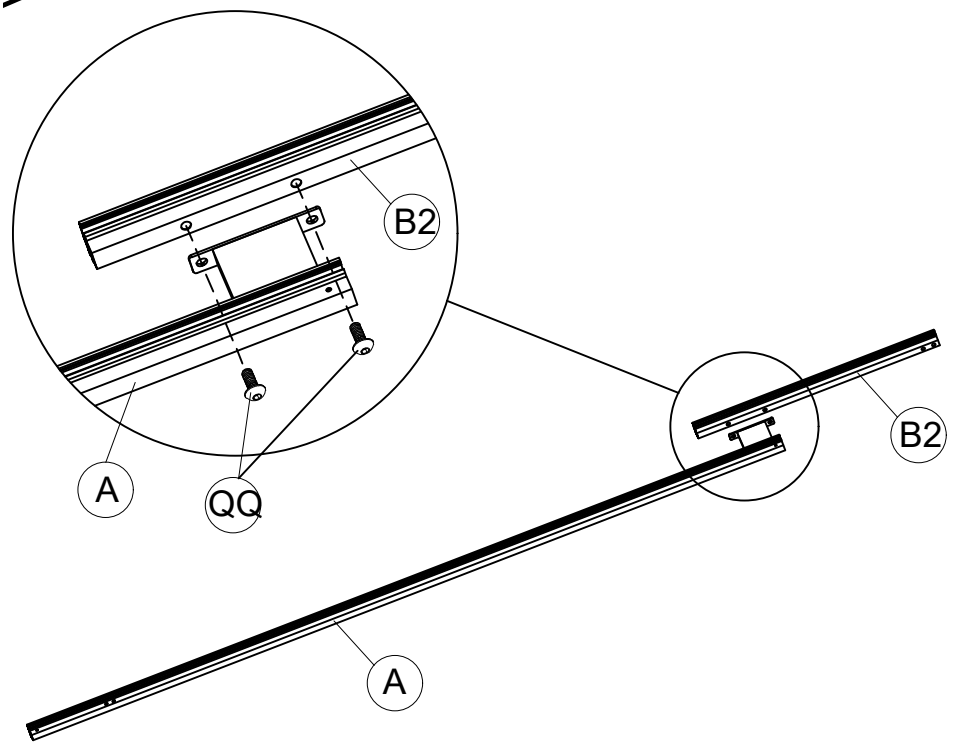

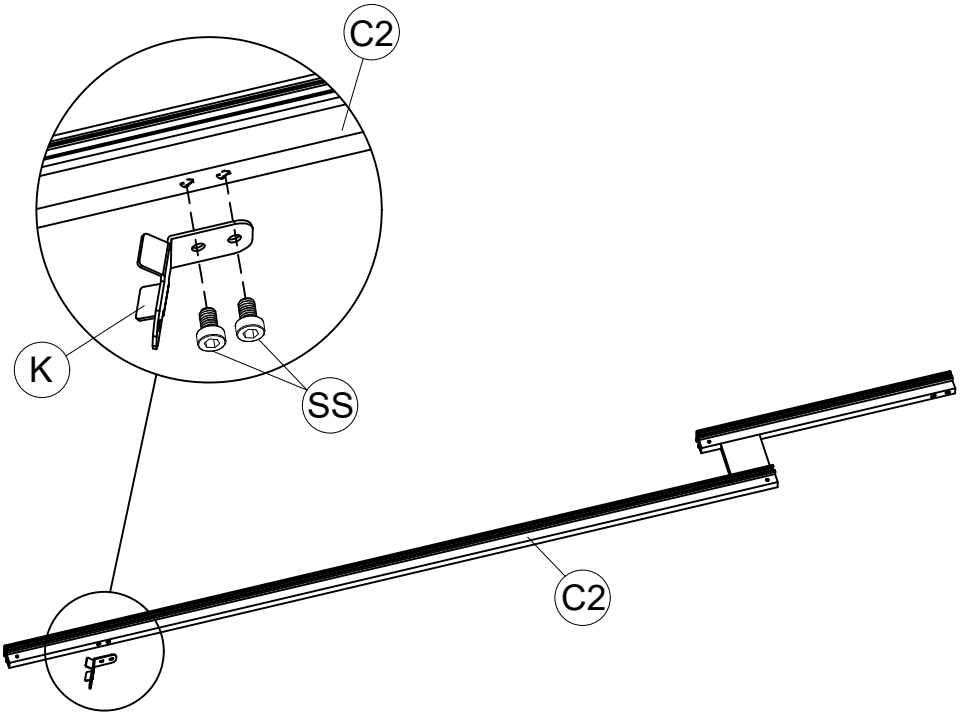

15

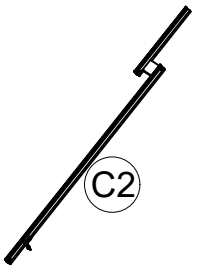

4x

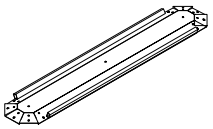

L3 1x



M6x15

QQ 8x

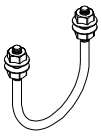

VV 1x

<10>

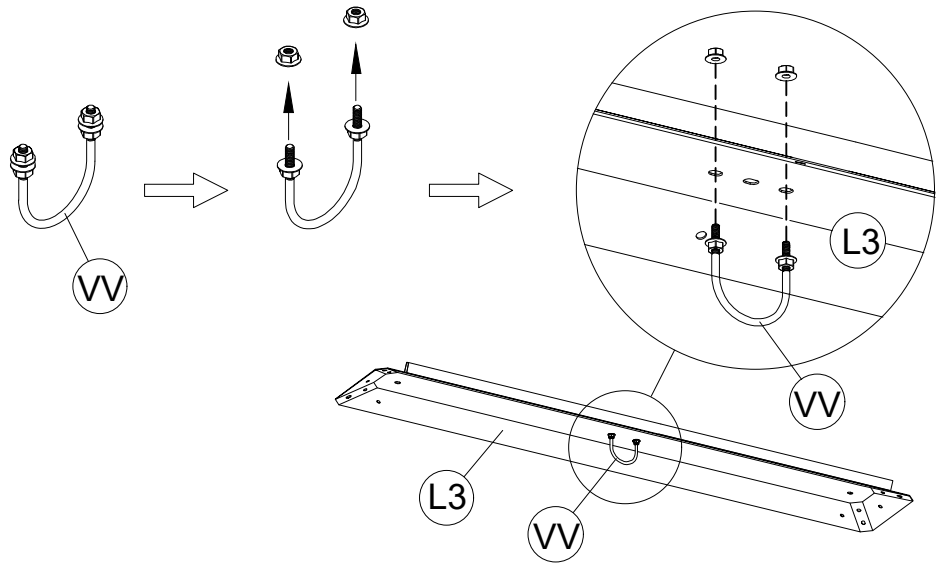

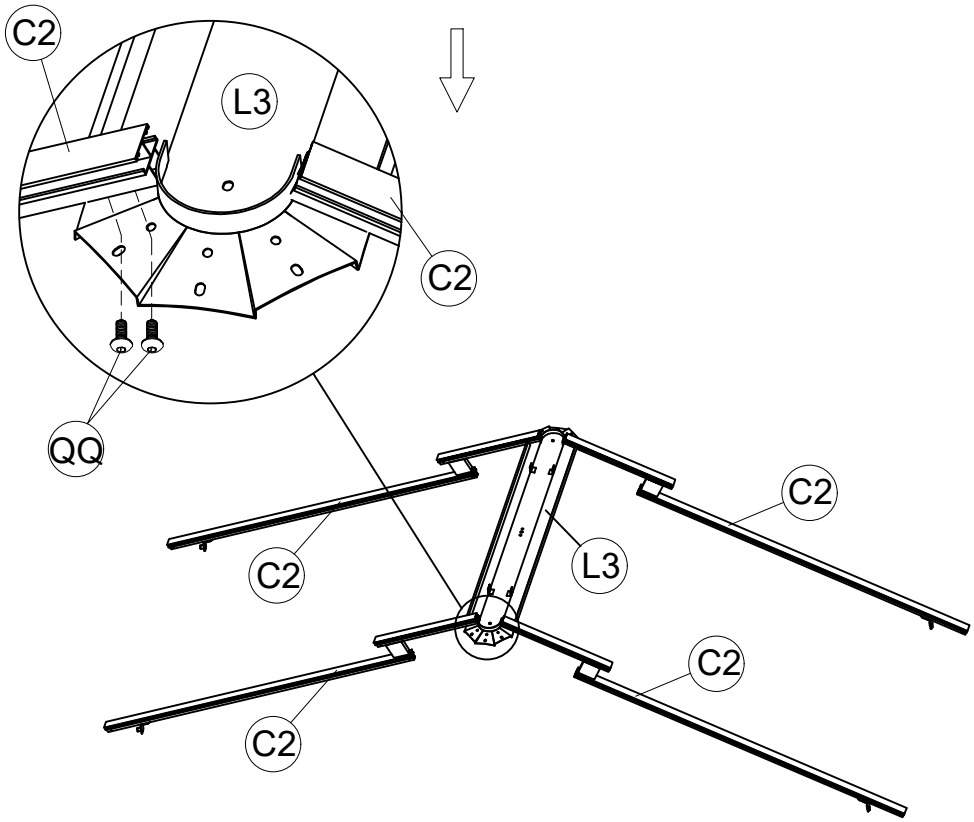

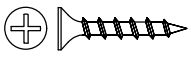

M5*30

EE 4x

<11>

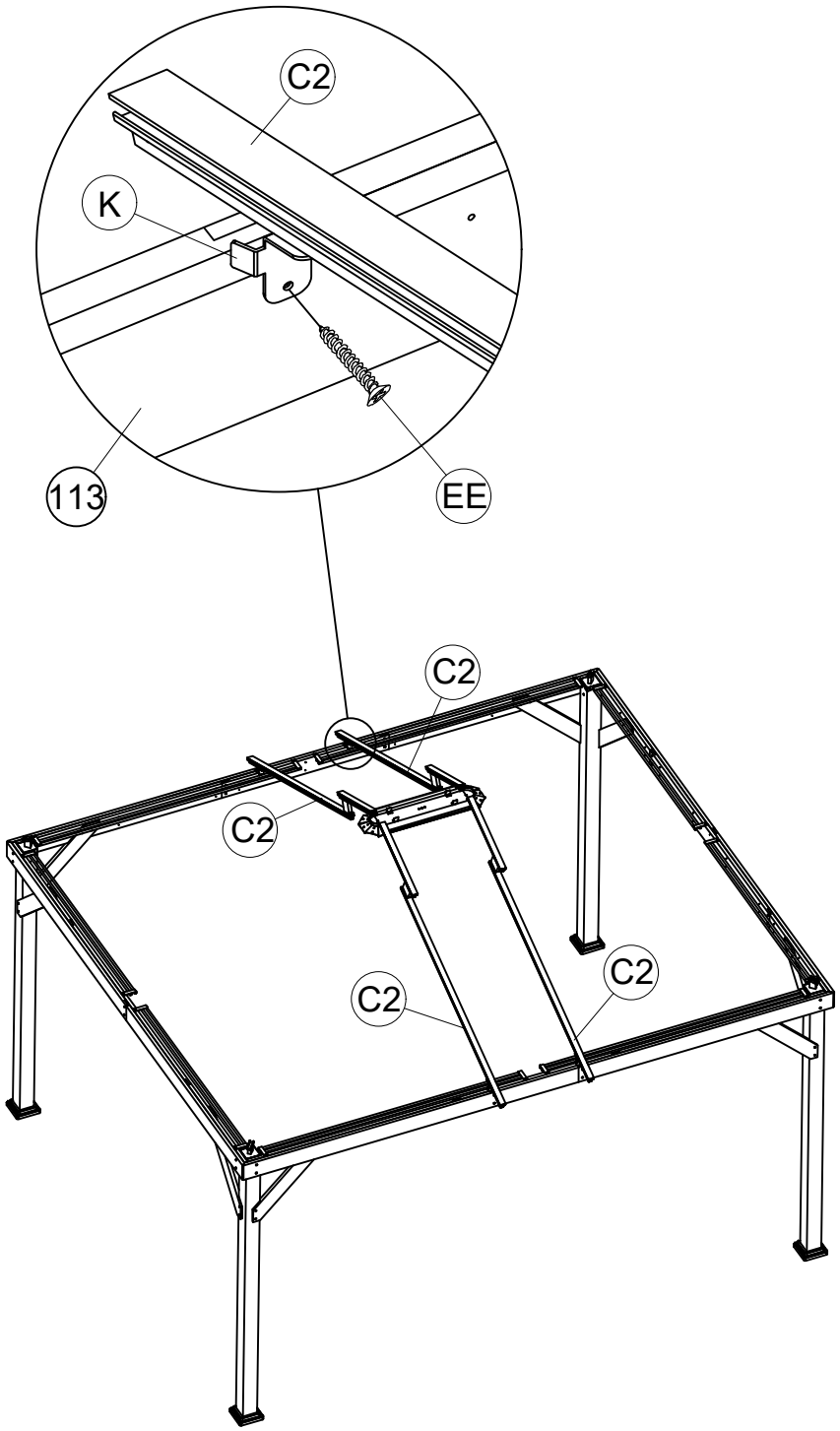

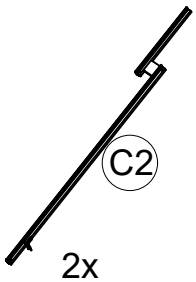

2x

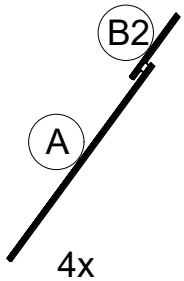

4x



M6x15

QQ 12x

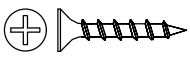

M5*30

EE 2x



M6x35

TT 8x



Nut M6

DD 8x



Flat Washer M6

BB 16x

18

<12>

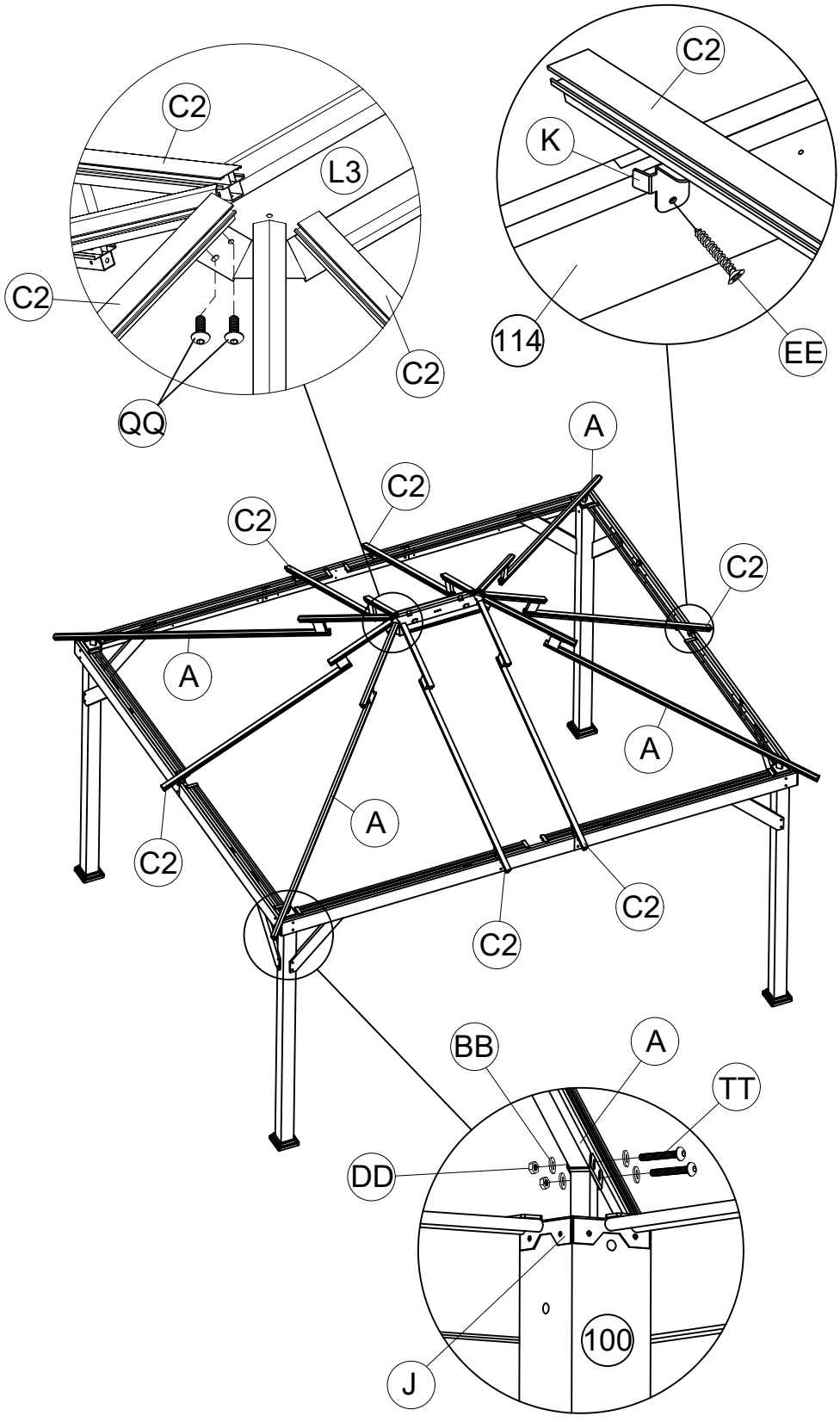

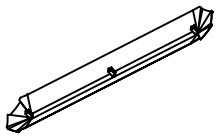

M3 1x



ZZ 2x

<13>

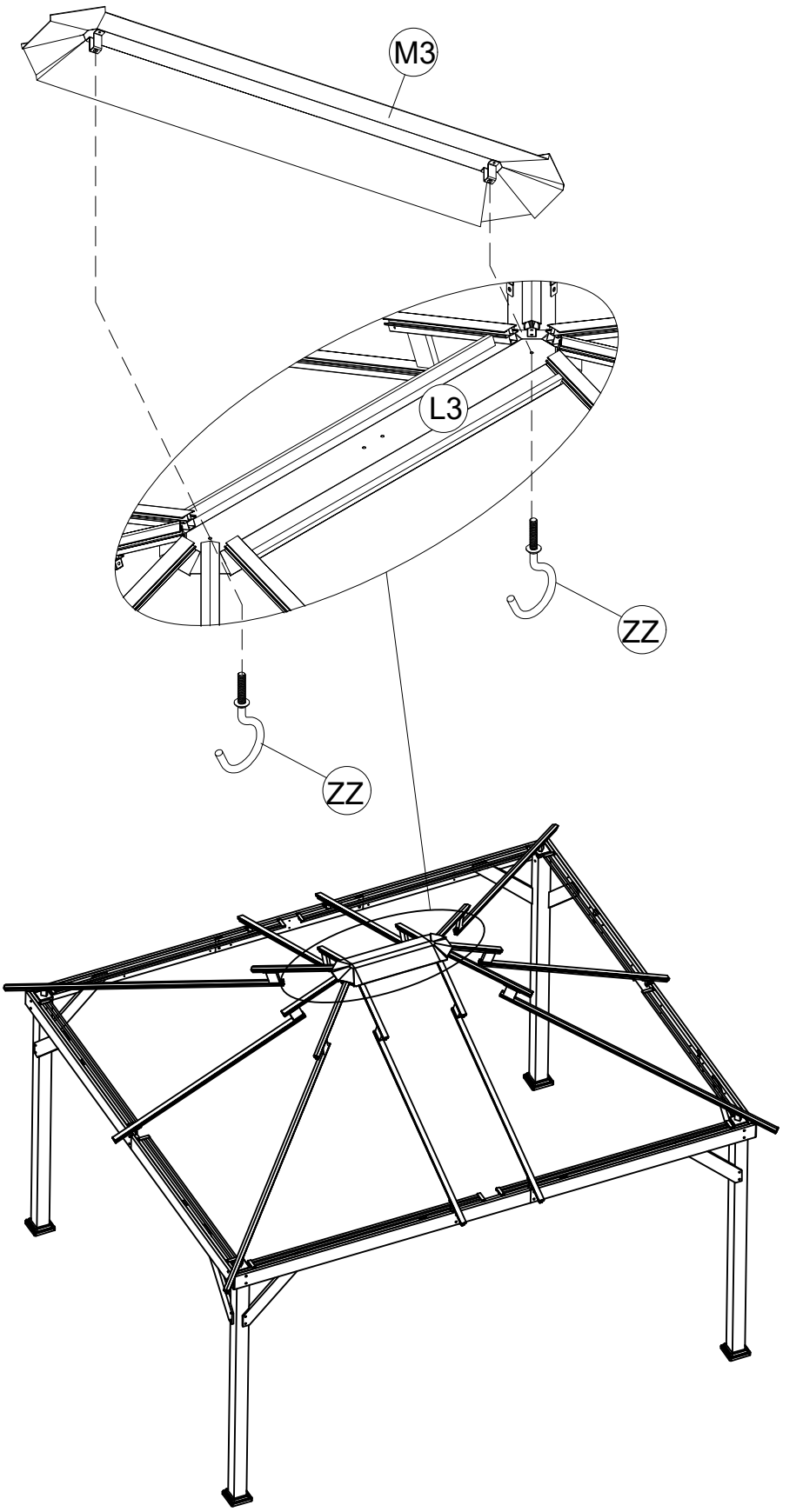



T7 4x



T8 4x



T6 2x

<14>

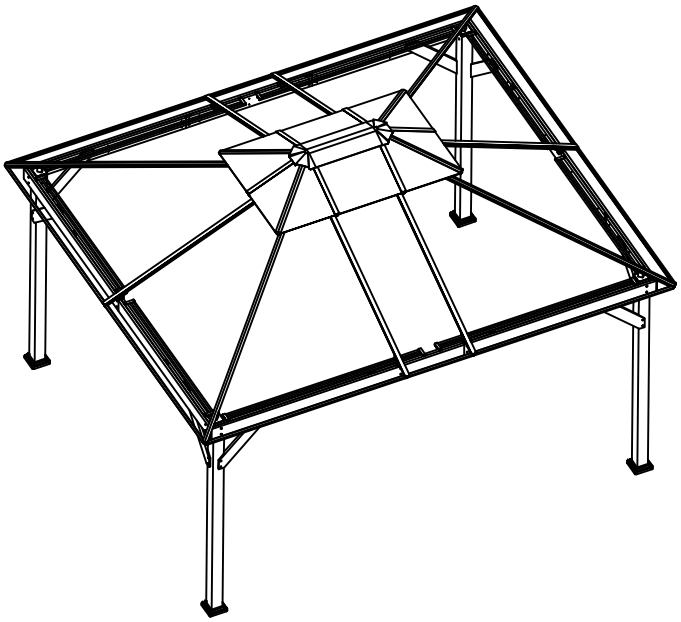

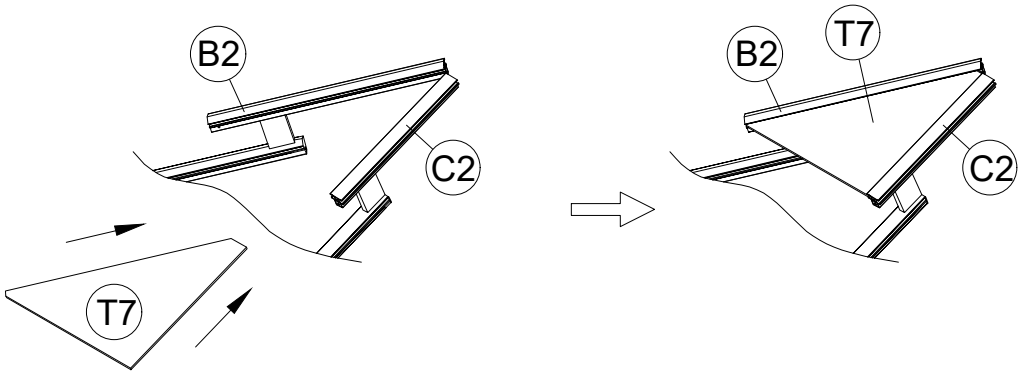

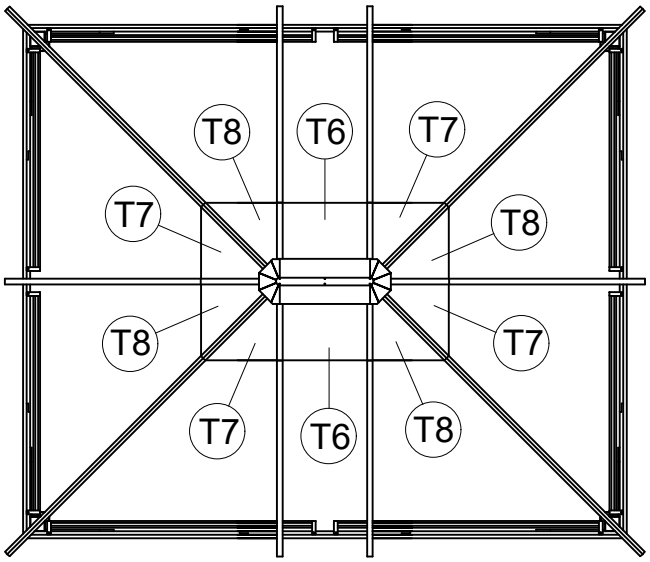

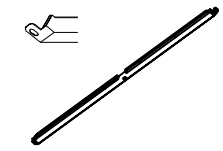

E18 2x

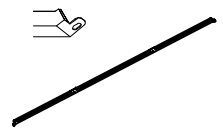

E19 2x



N 4x



N1 6x



M6x15

QQ 10x

21

<15>

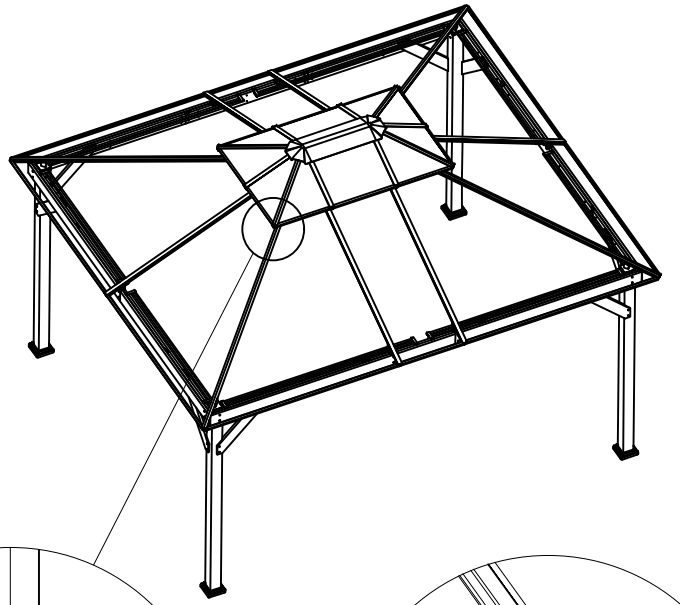

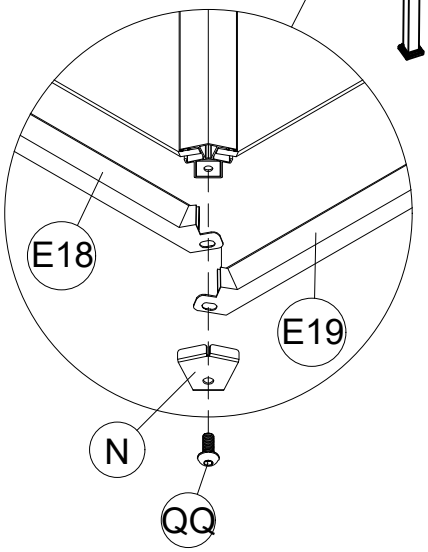

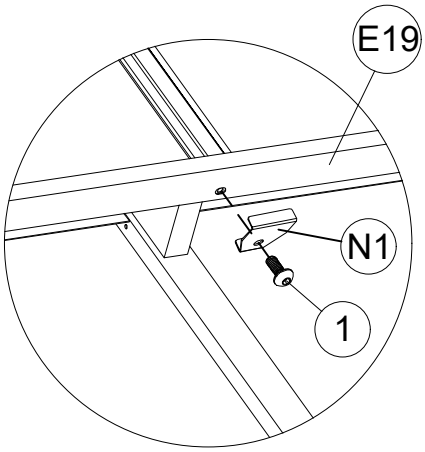

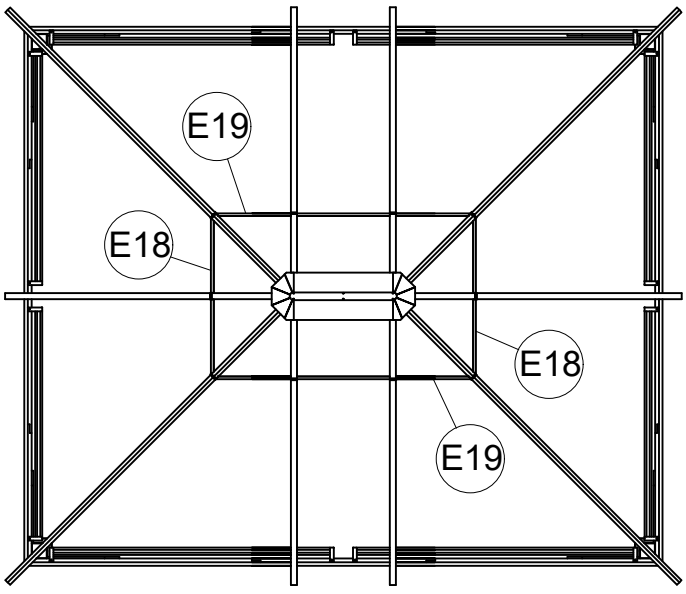

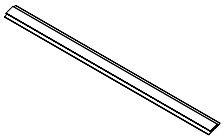

D5 2x

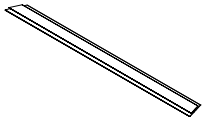

D10 4x

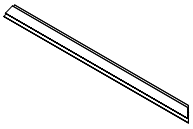

D11 4x

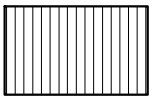

S7 2x

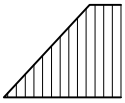

S16 4x

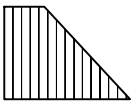

S17 4x

22

<16>

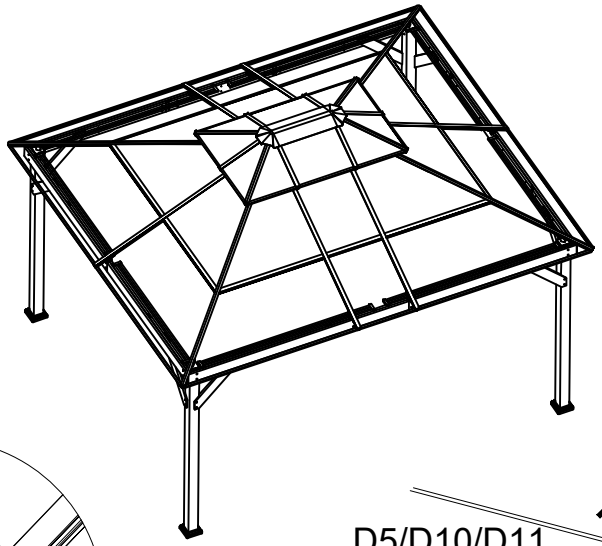

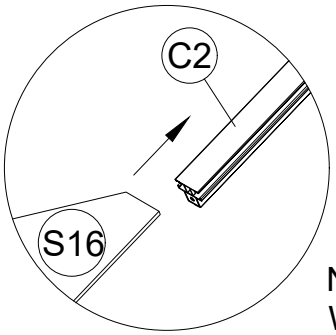

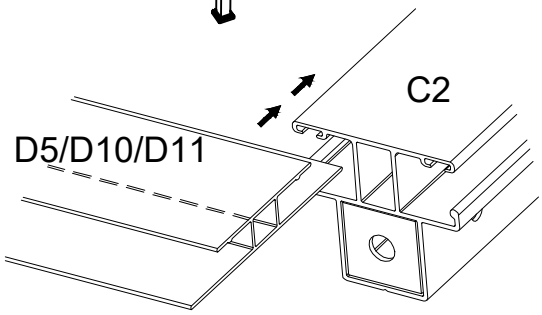

Note:

When D10 or D11 or D5 slide into the C,the wide side must be face down and narrow side face up, otherwise will cause water leaking

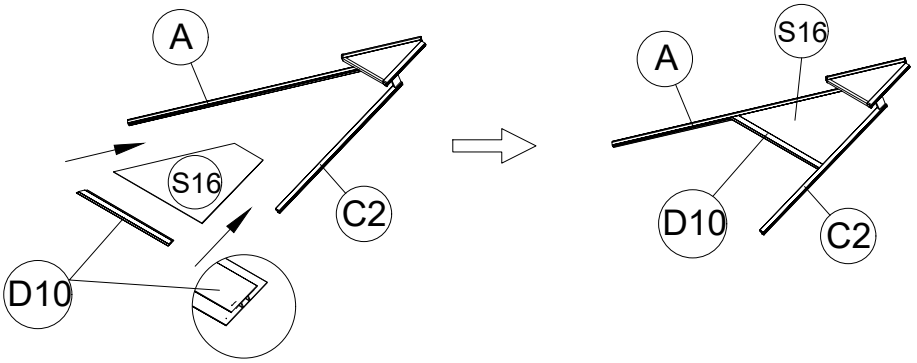

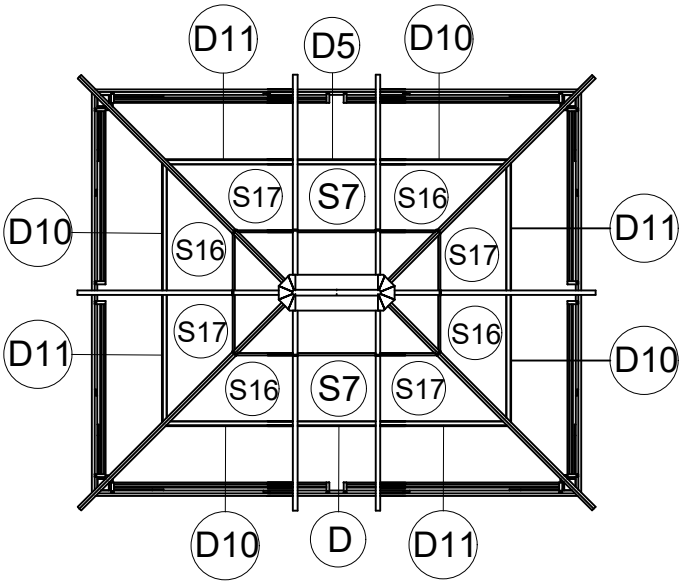

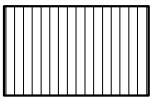

S7 2x

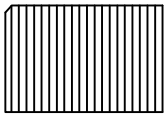

S14 4x

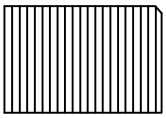

S15 4x

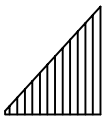

S12 4x

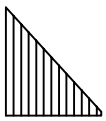

S13 4x



D3 4x



D4 4x

<17>

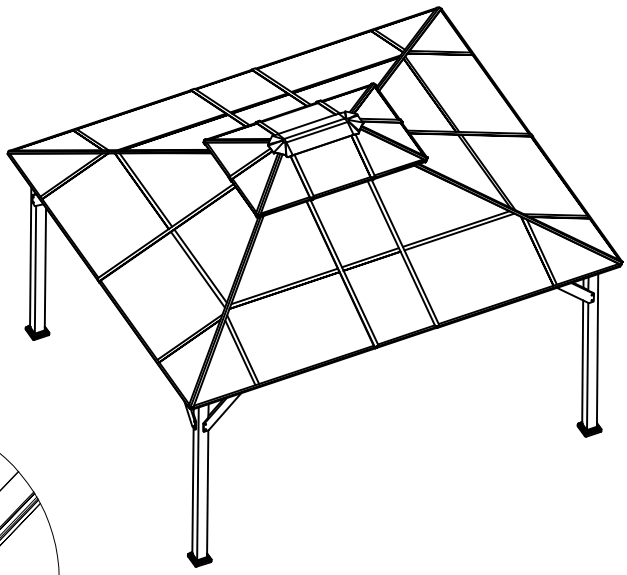

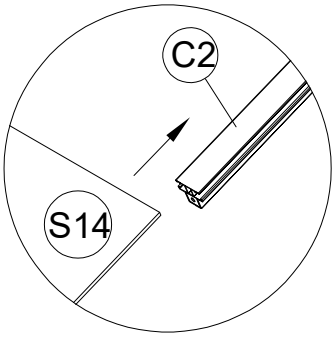

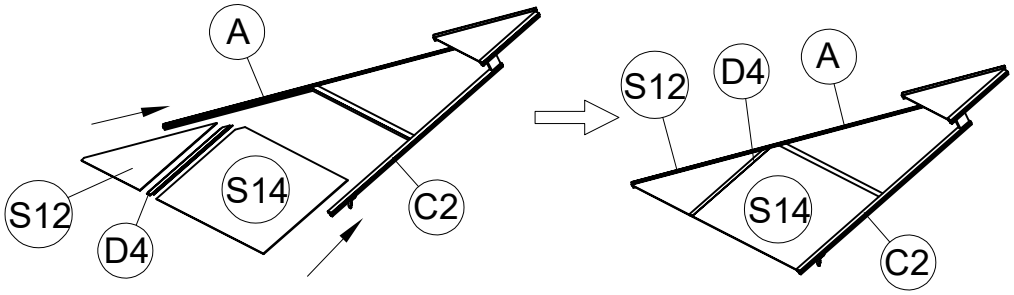

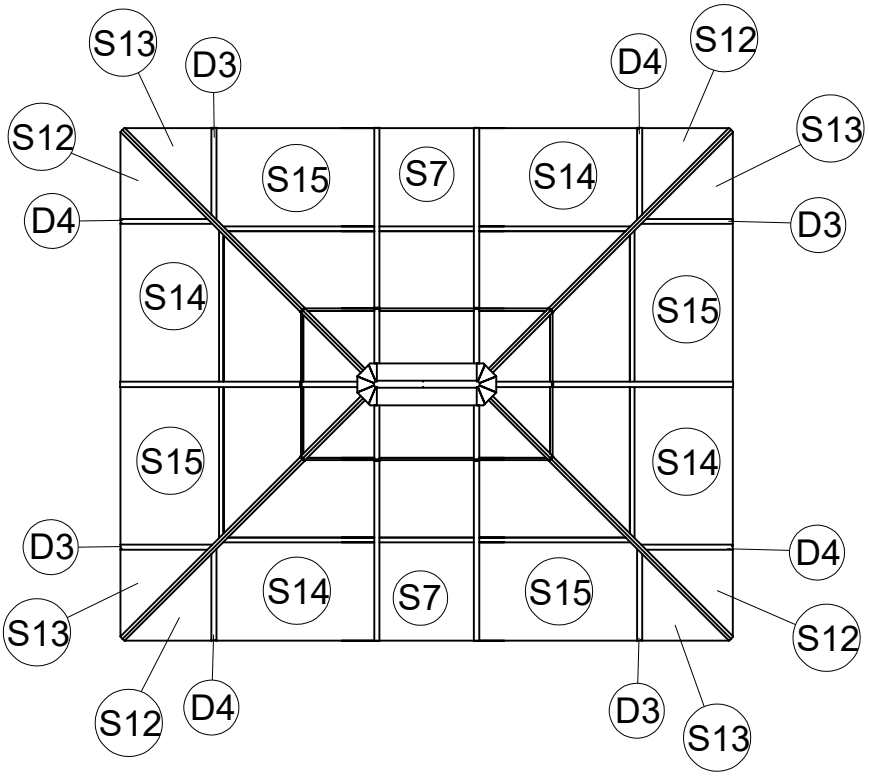

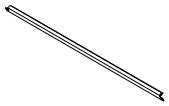

E9 2x

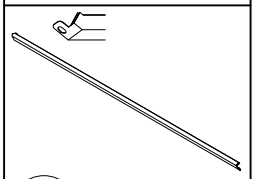

E16 4x

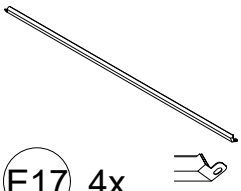

E17 4x



N 4x



N1 6x



M6x15

QQ 10x

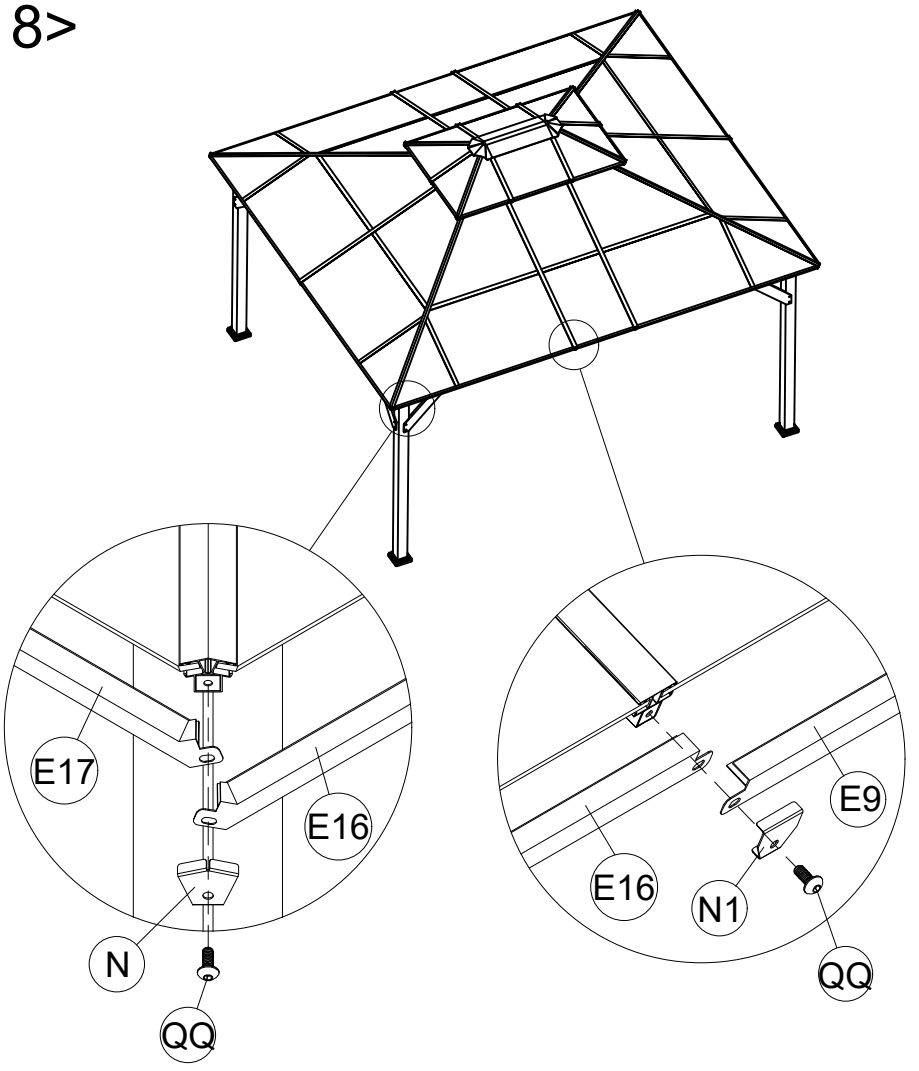

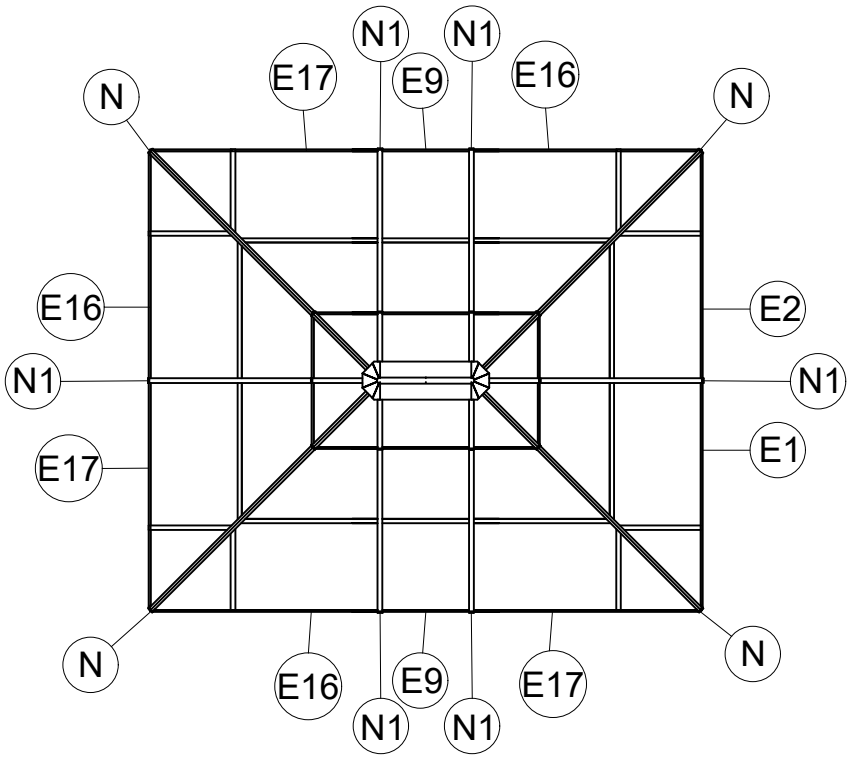



E21 2x

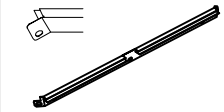

E20 2x



N 4x



M6x15

QQ 10x

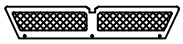

H8 2x



H9 2x



M6x10

XX 8x



Nut M6

DD 8x

25

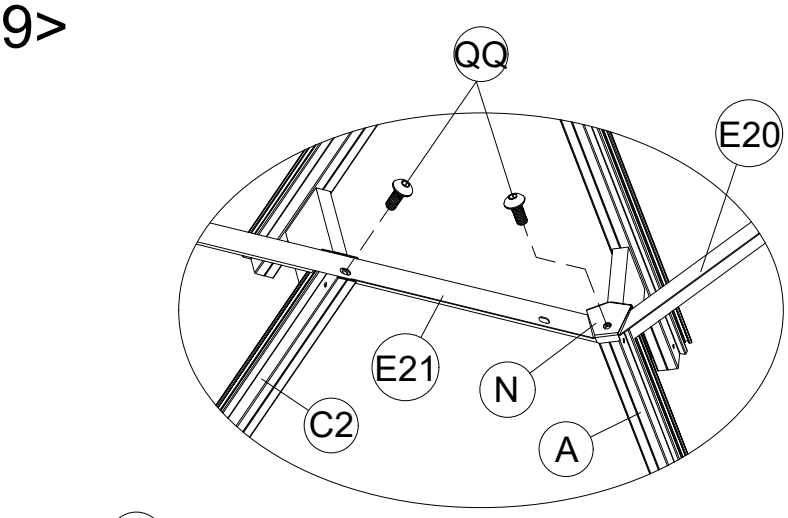

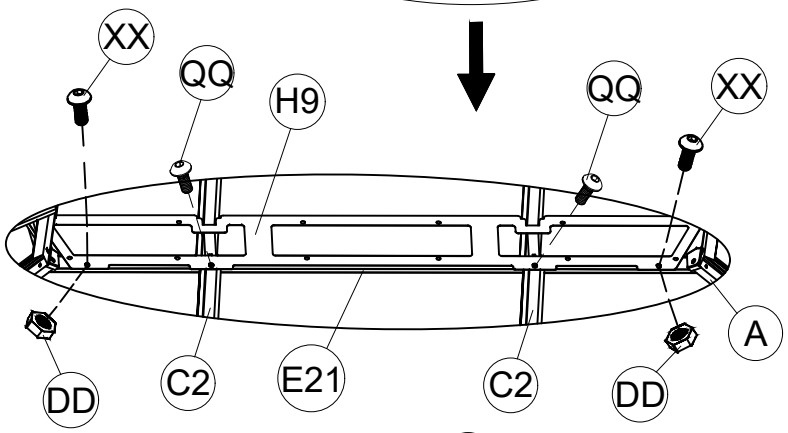

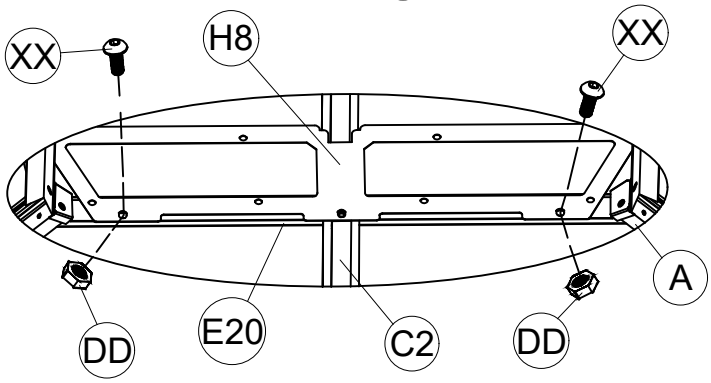

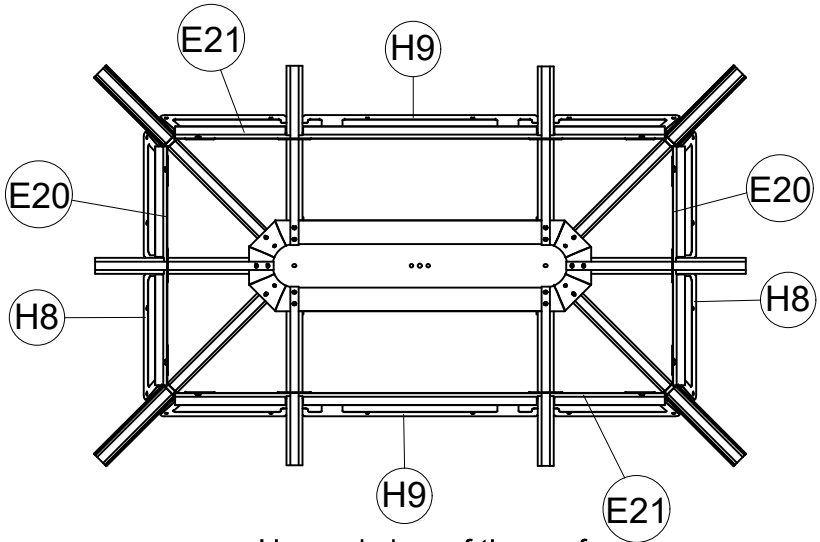

Upward view of the roof

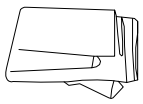

Y3 4x



R 44x

<20>

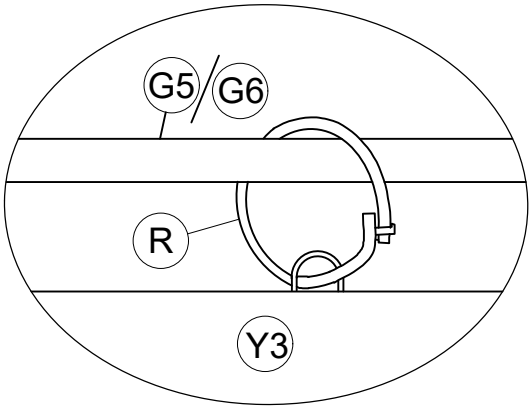

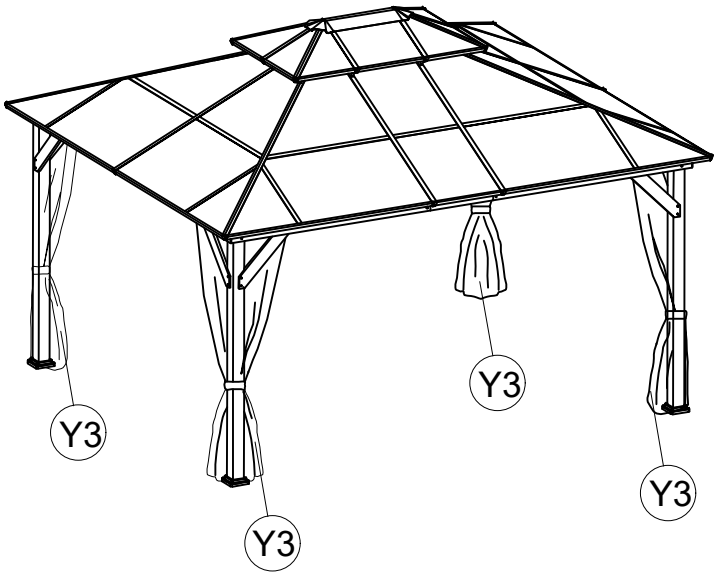

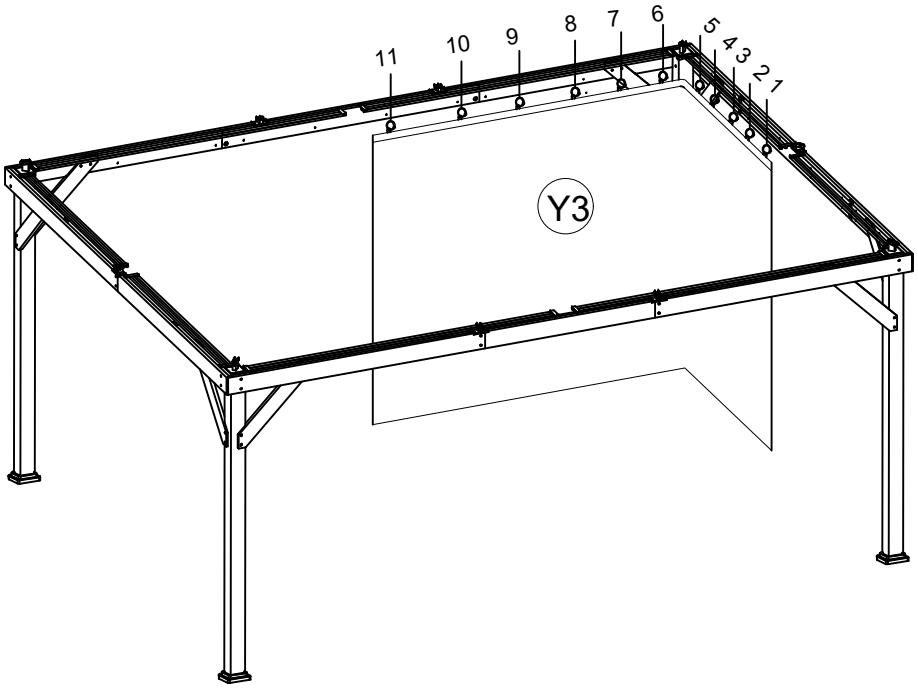

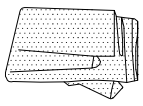

X3 4x



R 44x

<21>

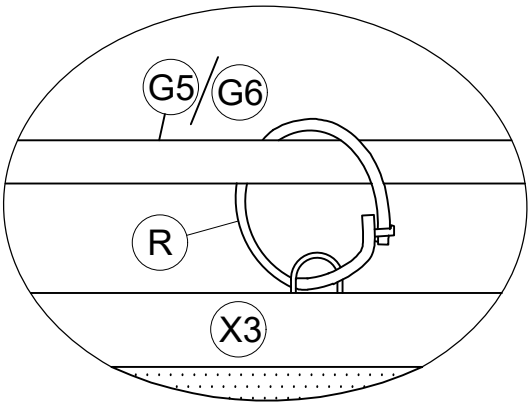

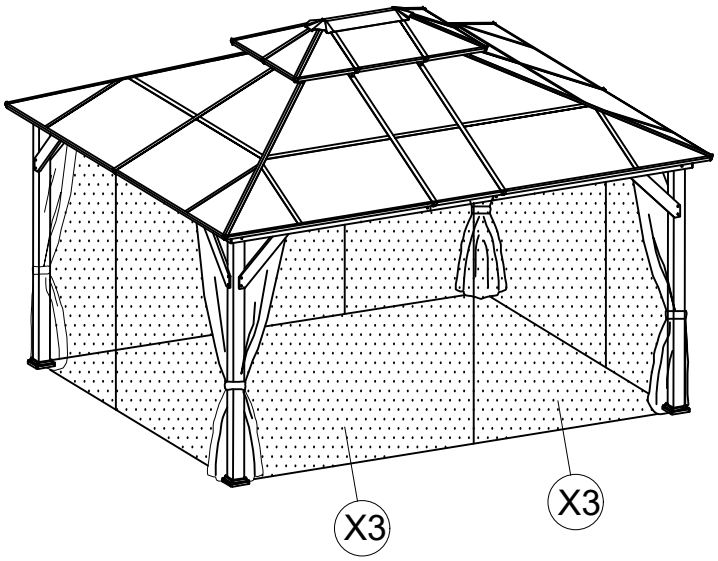

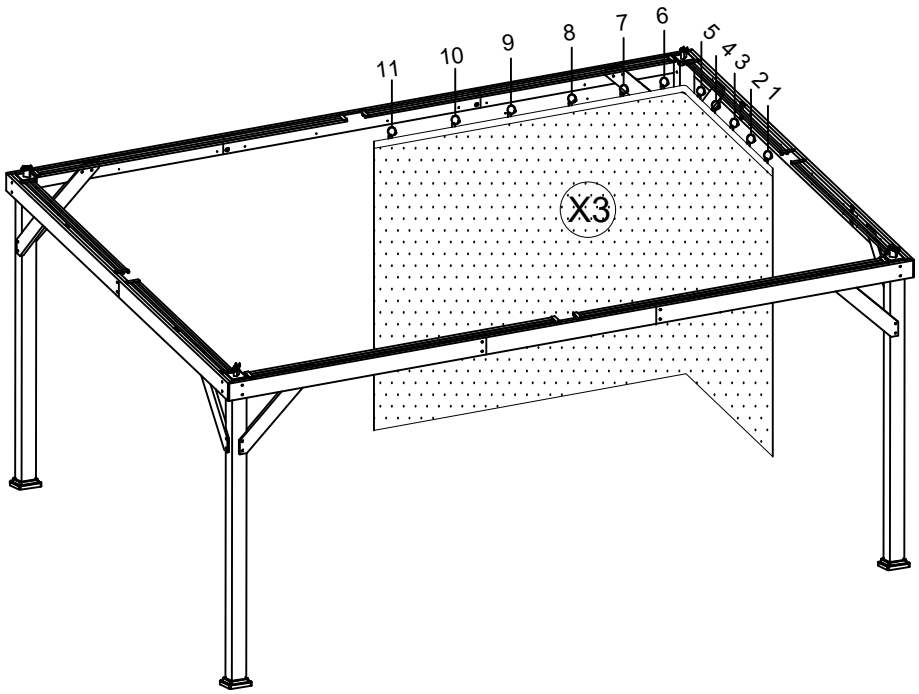



PP 8x

<22>

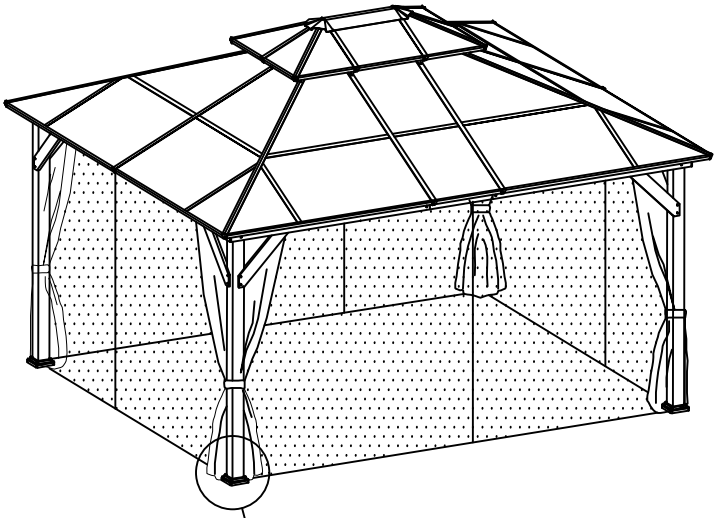

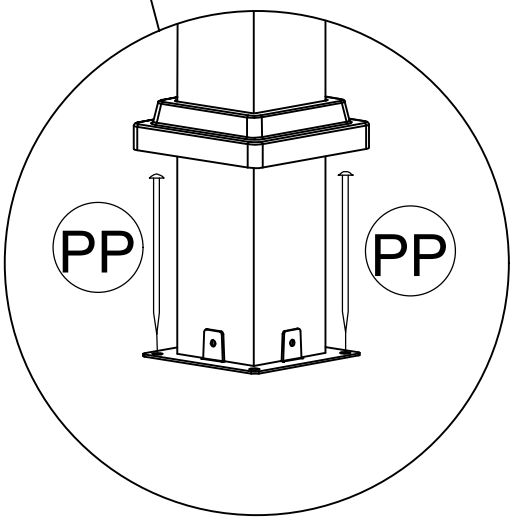

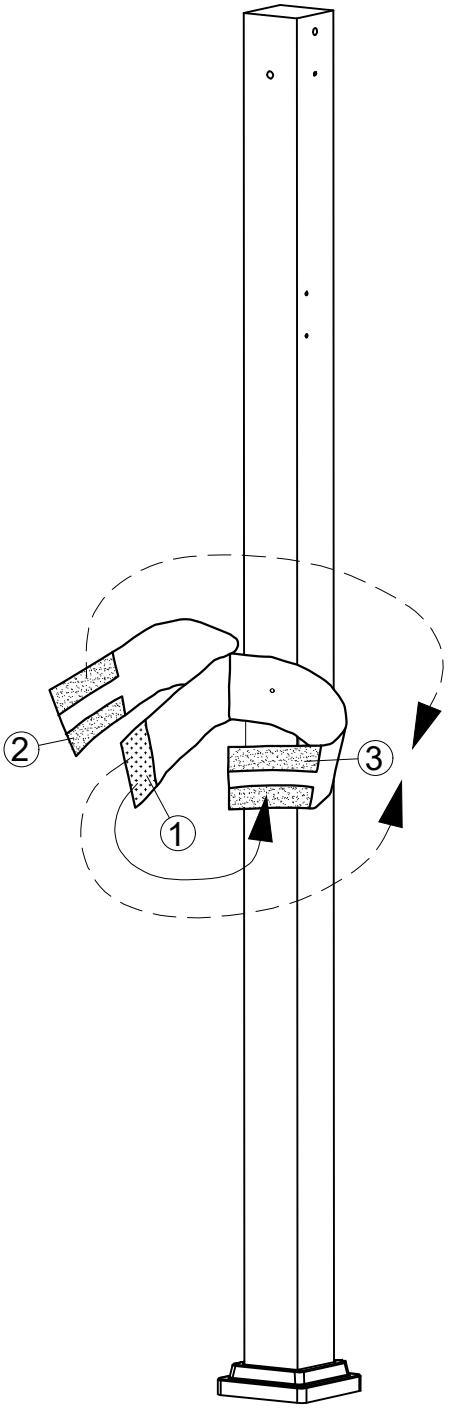

Note:
1. 1 stick 2 tie X and Y together
2. 1 stick 3 towards back tie Y
3. 1 stick 3 towards front tie X